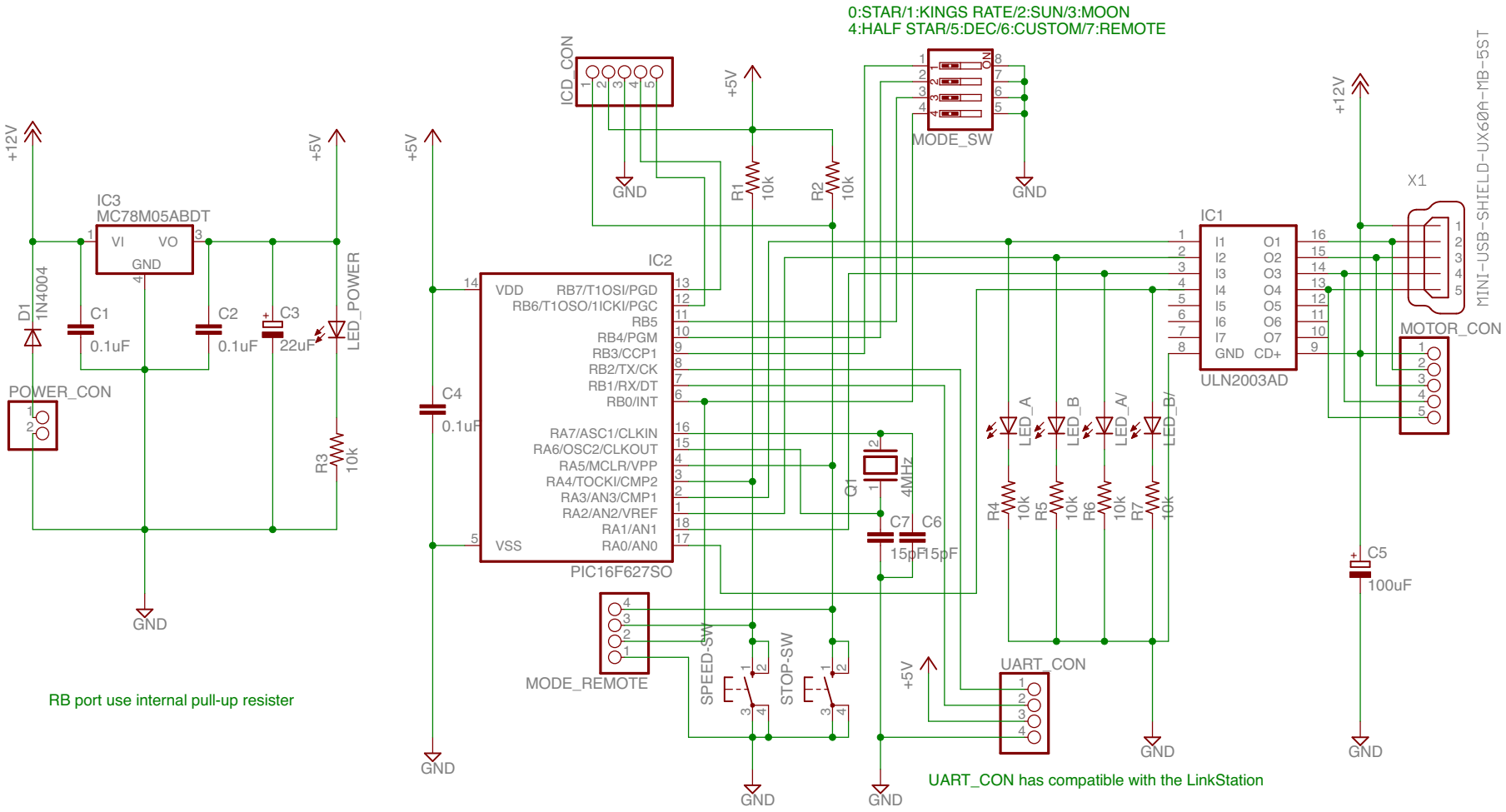
0:STAR/1:KINGS RATE/2:SUN/3:MOON
4:HALF STAR/5:DEC/6:CUSTOM/7:REMOTE
+12V
+5V
IC3
MC78M05ABDT
VI
VO
GND
D1
1N4004
C1
0.1uF
C2
0.1uF
C3
22uF
LED_POWER
POWER_CON
R3
10k
GND
ICD_CON
R1
10k
R2
10k
MODE_SW
IC2
VDD
VSS
RB7/T1OSI/PGD
RB6/T1OSO/1ICKI/PGC
RB5
RB4/PGM
RB3/CCP1
RB2/TX/CK
RB1/RX/DT
RB0/INT
RA7/ASC1/CLKIN
RA6/OSC2/CLKOUT
RA5/MCLR/VPP
RA4/TOCKI/CMP2
RA3/AN3/CMP1
RA2/AN2/VREF
RA1/AN1
RA0/AN0
PIC16F627SO
C4
0.1uF
Q1
4MHz
C7
15pF
C6
15pF
MODE_REMOTE
SPEED-SW
STOP-SW
IC1
I1
I2
I3
I4
I5
I6
I7
GND
O1
O2
O3
O4
O5
O6
O7
CD+
ULN2003AD
LED_A
LED_B
LED_A/
LED_B/
R4
10k
R5
10k
R6
10k
R7
10k
UART_CON
X1
MINI-USB-SHIELD-UX60A-MB-5ST
MOTOR_CON
C5
100uF
RB port use internal pull-up resister
UART_CON has compatible with the LinkStation